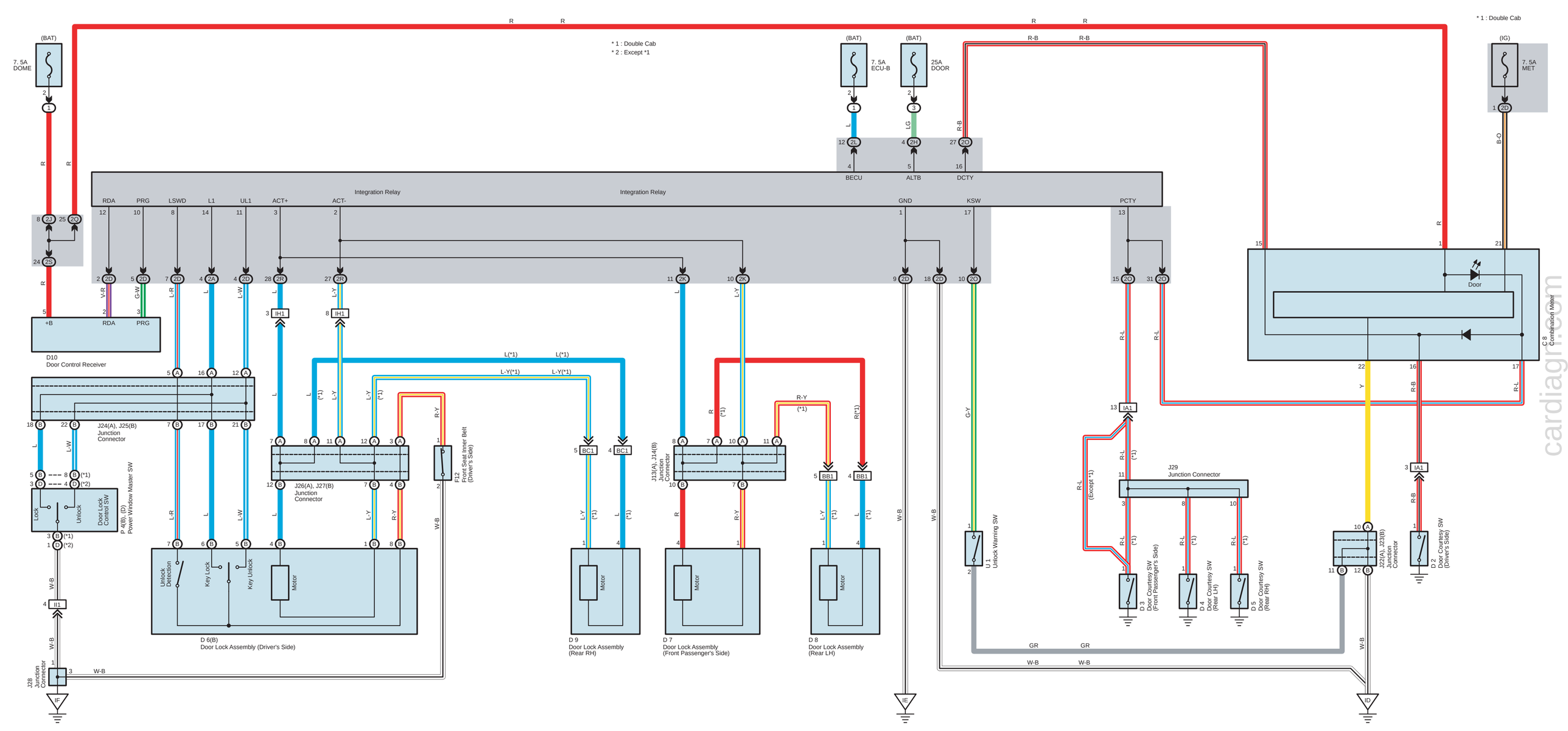
* 1 : Double Cab
* 2 : Except *1
(BAT)
7. 5A DOME
7. 5A ECU-B
25A DOOR
(IG)
7. 5A MET
BECU
ALTB
DCTY
Integration Relay
RDA
PRG
LSWD
L1
UL1
ACT+
ACT-
GND
KSW
PCTY
+B
D10 Door Control Receiver
J24(A), J25(B) Junction Connector
J26(A), J27(B) Junction Connector
J13(A), J14(B) Junction Connector
F12 Front Seat Inner Belt (Driver's Side)
Lock
Unlock
Door Lock Control SW
P 4(B), (D) Power Window Master SW
Unlock Detection
Key Lock
Key Unlock
Motor
D 6(B) Door Lock Assembly (Driver's Side)
D 9 Door Lock Assembly (Rear RH)
D 7 Door Lock Assembly (Front Passenger's Side)
D 8 Door Lock Assembly (Rear LH)
J28 Junction Connector
IF
IE
ID
U 1 Unlock Warning SW
J29 Junction Connector
D 3 Door Courtesy SW (Front Passenger's Side)
D 4 Door Courtesy SW (Rear LH)
D 5 Door Courtesy SW (Rear RH)
J22(A), J23(B) Junction Connector
D 2 Door Courtesy SW (Driver's Side)
C 8 Combination Meter
Door
(Except *1)
cardiagram